Installation Manual

Model No.:HG-L249C-24

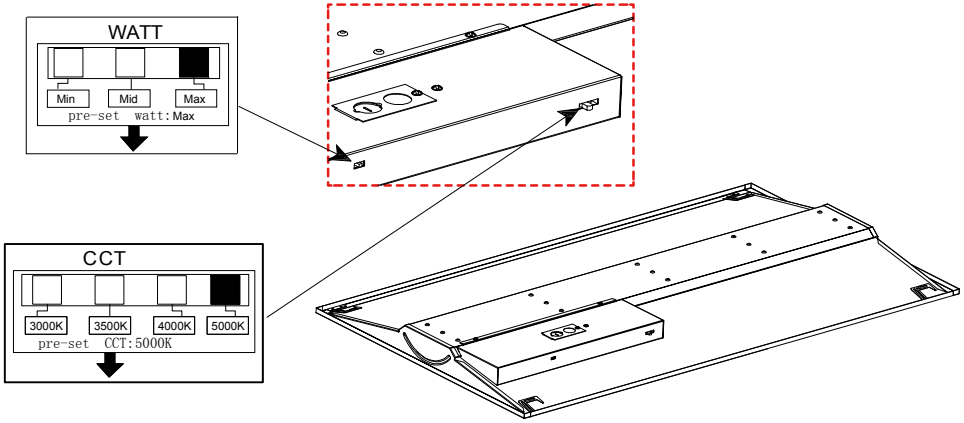

Installation manual

A.T-Grid ceilings installation

Step1

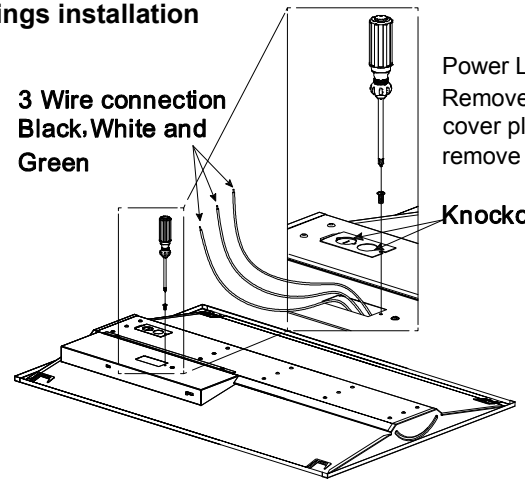

Power Leads Connection

Remove screw holding access cover plate and remove the necessary knockout

Step2

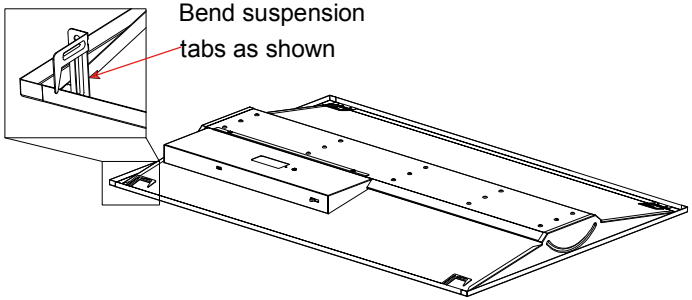

Bend suspension tabs as shown

Step3

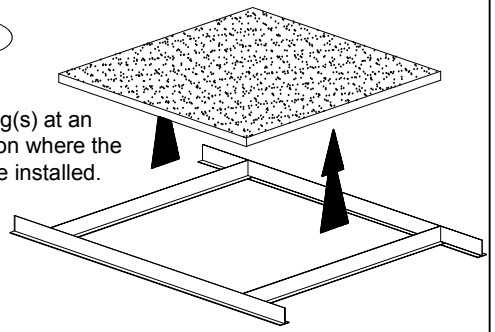

Remove the ceiling(s) at an appropriate location where the light fixture is to be installed.

Step4

Set light fixture into the suspension with tabs.Hang over the T-bar as shown.

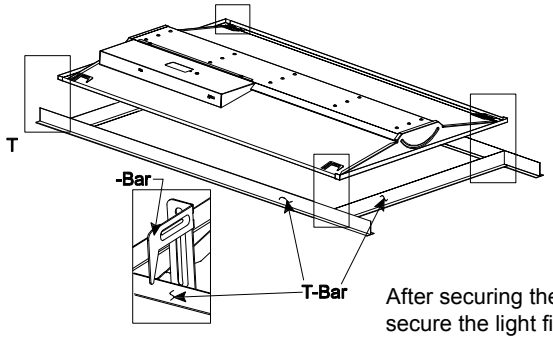

Step5

After securing the light fixture to the T-bar, secure the light fixture to the ceiling with aircraft cable or wires capable of supporting 100 bs.minimum

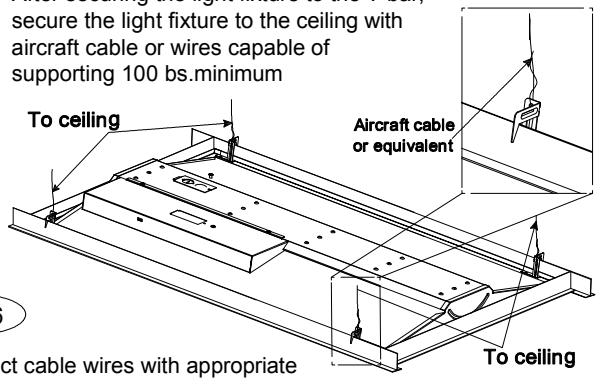

Step6

Connect cable wires with appropriate relief strain and wire connectors(not provided).Make sure all wires are tucked in before reinstalling the cover plate.

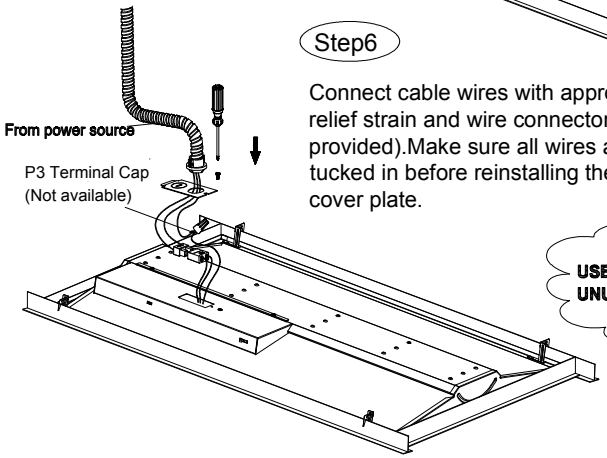

USE WIRE NUTS TO COVER UNUSED WIRESS